EUP-0S11-20CM

EPON ONU STICK SFP 1310nm TX / 1490nm RX PX20+ SC With MAC

Features

- Single fiber bi-directional data links EPON ONU and application with EPON MAC function.
- 1310nm DFB burst mode transmitter, 1490nm TIA continuous mode receiver
- Single 3.3V powersupply
- Digital diagnostic monitor interface compatible with SFF-8472
- SFP MSA compliance
- Low EMI and excellent ESD protection
- Class I laser safety standard IEC-60825 compliant
- ROHS compliance
- Complies with SFP Multi-Source Agreement (MSA) SFF-8074i
- Complies with ITUT-T G.984.2, G.984.2 Amendment 1
- Complies with ITUT G.988 ONU management and control interface (OMCI) specification

Applications

- Passive Optical Networks (PON)
- The product is an MSA-compliant SFP that incorporates not just the optics for an ONU, but all of the electronics need as well.
- It is a "PON on a Stick" that an entire FTTH ONU in a slightly oversized SFP. It can be plugged into networking equipment.
- Allowing the data interfaces on a switch, router, etc. to be customized for different fiber environments and distance requirements

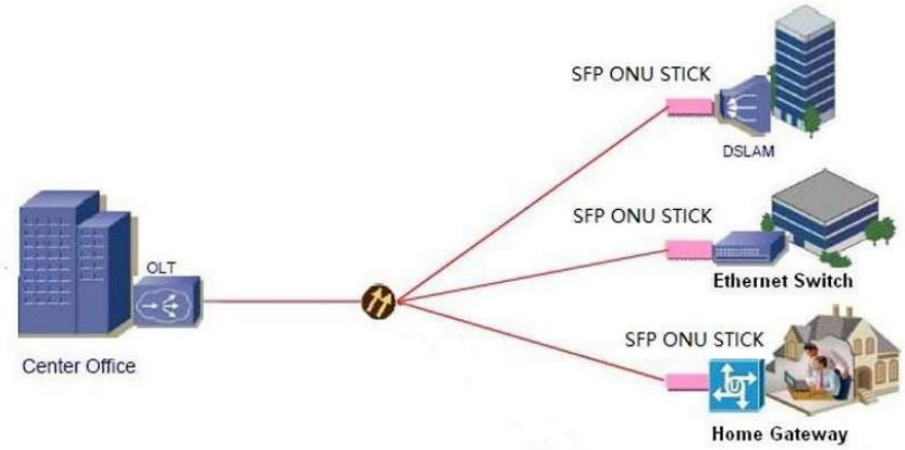

Absolute Maximum Rating

Table 1- Absolute Maximum Rating

Parameter	Symbol	Min.	Max.	Unit
Storage Temperature	Tstg	-40	85	°C
Operating Temperature	Tc	0	+70	°C
	Tc	-40	+85	°C
Operating Humidity	OH	5	95	%
Power Supply Voltage	Vcc	0.5	3.6	V

Recommended Operating Environment

Table 2 - Recommended Operating Environment

Parameter	Symbol	Min.	Typ	Max.	Unit	Notes
Power Supply Voltage	Vcc	3.13	3.3	3.47	v	
Power Dissipation	PD	-	2.10	2.5	w	Max value under High

						temp environment
Operating Case Temperature	Tc	0		+70	°C	
	Tc	-40		+85	°C	
Operating Humidity Range	OH	5		95	%	
Data Rate			TX:1.25 / RX:1.25		Gbit/s	EPON MODE
Data Rate Drift		-100		+100	PPM	

Transmitter Optical Characteristics

Table 3- Transmitter Optical Characteristics

Parameter	Symbol	Min.	Typ.	Max.	Unit	Notes
Optical Center Wavelength	λc	1290	1310	1330	nm	
Spectral Width(-20dB)	△λ			1	nm	
Side Mode Suppression Ratio	SMSR	30			dB	
Average Launch Optical Power	AOP	0.5		4	dBm	Launched into SMF Fiber
Burst of Average Output Power				-45	dBm	
Extinction Ratio	ER	10			dB	
Rise/Fal Time(20%-80%)	T_R/T_F			0.26	ns	Unfiltered PRBS 223-l@l244.16Mbps
$RIN_{15}OMA$				-115	dB/Hz	
Optical Return Loss Tolerance					dB	
Transmitter Reflectance		-15		-10	dB	
Transmiter and Dispersion Penalty	TDP			1	dB	Transmition 20km SMF.
Optical Waveform Diagram	Compliant With ITU-T G984.2					PRBS 223-1@1244.16Mbps

Receiver Electrical Characteristics

Table 4- Receiver Electrical Characteristics

Parameter	Symbol	Min.	Typ.	Max.	Unit	Notes
Operating Wavelength	Ac	1480	1490	1500	nm	
Sensitivity	SEN			-28	dBm	PRBs 223-1@1G-2.5Gbps
Saturation Optical Power	SAT	-8			dBm	
Loss of Signal De-Assert	LosD			-29	dBm	
Loss of Signal Assert	LoSA	-40			dBm	
Signal-Detected Hysteresis		0.5		6	dBm	
Receiver Reflectance				-12	dB	λ=1490nm
WDM Filter solation		38			dB	λ=1550nm
		35			dB	λ=1650nm

Transmitter Electrical Characteristics

Table 5- Transmitter Electrical Characteristics

Parameter	Symbol	Min.	Typ.	Max.	Unit	Notes
Data Input Dfferential Swing		300		1800	mV	CML input,, AC coupled
Input Differential Impedance		90	100	110	Ω	
Transmitter TxDisable Control Voltage-		0		0.8	V	
Transmitter TxDisable Votage-High		2.0		Vcc	V	
Transmitter Fault Alarm Voltage-Low		0		0.4	V	
Transmitr Fault Alarm Voltage-High		2.4		Vcc	V	

Receiver Electrical Characteristics

Table 6- Receiver Electrical Characteristics

Parameter	Symbol	Min.	Typ.	Max.	Unit	Notes
Data output Diferential Swing		300		1200	mV	CML output,AC coupled
Loss of Signal-Low		0		0.4	V	
Loss of Signal-High		2.4		Vcc	V	

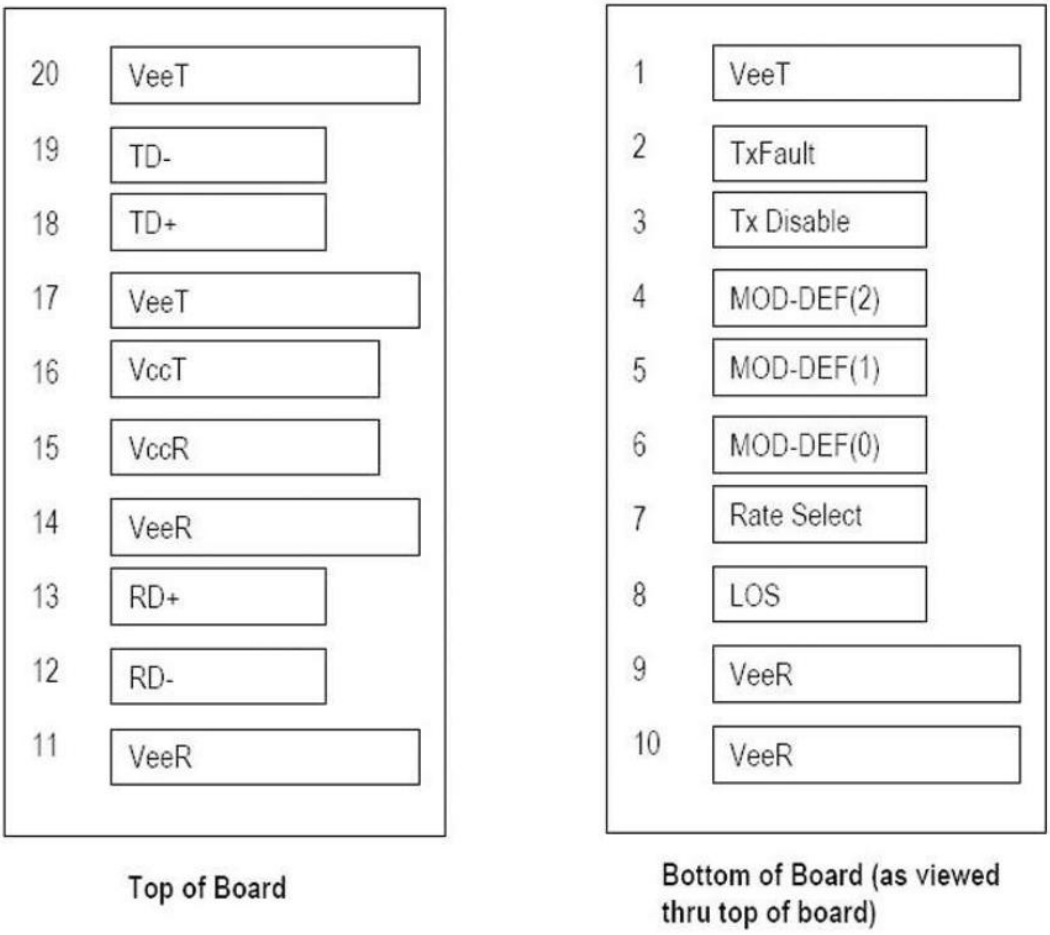

Figure 1 SFP Transceiver Electrical Pad Layout

Digital Diagnostic Monitoring Interface

Table 7- Digital Diagnostic Monitoring Interface

Parameter	Range	Accuracy	Ccalibration
Temperature	-40 to 85°C(I Temp)	±3°C	internal
	0 to 70°C(C Temp)	±3°C	Internal
Voltage	0 to 3.7v	±3%	Internal
Bias Current	0 to 130mA	±10%	internal
TX Power	-10 to 8 dBm	±2dB	internal
RX Power monitor	-28 to -8 dBm	±2dB	internal

PIN Description

Table 8- PIN Description

	Name	Description	Notes
1	VeeT	Transmitter Ground	Note 5
2	TXFault	Transmitter Fault Indication	Note 1
3	TX Disable	Transmitter Disable	Note 2,Moduledisables on highor open
4	MOD-DEF2	Module Definition2	Note3,2 wire serial ID Interface
5	MOD-DEF1	Module Definition 1	Note 3,2 wire serial D Interface
6	MOD-DEFO	Module Definition 0	Note 3 Grounded in Module
7	Rate	NC	
8	Los	Loss of Signal	Note4
9	Vee R	Receiver Ground	Note5
10	Vee R	Receiver Ground	Note5

11	Vee R	Receiver Ground	Note5
12	RD-	Inv. Received Data Out	Note6
13	RD+	Received Data Out	Note6
14	Vee R	Receiver Ground	Note5
15	Vcc R	Receiver Power	3.3±5%,Note7
16	Vcc T	Transmitter Power	3.3±5%,Note7
17	Vee T	Transmitter Ground	Note5
18	TD+	Transmit Data In	Note8
19	TD-	Inv. Transmit Data In	Note5
20	Vee T	Transmitter Ground	Note 8

Note:

1. TX Fault is an open collector/drain output, which should be pulled up with a 4.7K - 10KQ resistor on the host board. Pull up voltage between 2.0V and VCCT, R+0.3V. When high, output indicates a laser fault of some kind. Low indicates normal operation. In the low state, the output will be pulled to " 0.8V.
2. TX disable is an input that is used to shut down the transmitter optical output. It is pulled up within the module with a 4.7 - 10KQ resistor. Its states are:

- Low (D - 0.8V): Transmitter on
- ("0.8, " 2.0V): Undefined
- High (2.0 - 3.465V): Transmitter Disabled
- Open: Transmitter Disabled

3. Mod-Clef 0,1,2. These are the module definition pins. They should be pulled up with a 4.7K - 10KQ resistor on the host board.

The pull-up voltage shall be VccT or VCCR.

Mod-Oef 0 is grounded by the module to indicate that the module is present

Mod-Oef 1 is the clock line of two wire serial interface forseriallO

Mod-Oef 2 is the data line of two wire serial interface for serial ID

4. LOS (Loss of Signal) is an open collector/drain output, which should be pulled up with a 4.7K - 10KQ resistor. Pull up voltage between 2.0V and VCCT, R+0.3V. When high, this output indicates the received optical power is below the worst-case receiver sensitivity (as defined by the standard in use). Low indicates normal operation. In the low state, the output will be pulled to " 0.8V.
5. VeeR and VeeT may be internally connected within the SFP module.
6. ROI": These are the differential receiver outputs. They are AC coupled 100 CI differential lines which should be terminated with 100 C) (differential) at the user SERDES. The AC coupling is done inside the module and is thus not required on the host board.

The voltage swing on these lines will be between 370 and 2000 mV differential (185 - 1000 mV single ended) when properly terminated.

7. VCCR and VCCT are the receiver and transmitter power supplies. They are defined as 3.3V ±5% at the SFP connector

pin.

Maximum supply current is 300 mA. Recommended host board power supply filtering is shown below. Inductors with DC resistance of less than 1Q=should be used in order to maintain the required voltage at the SFP input pin with 3.3V supply voltage. When the recommended supply filtering network is used, hot plugging of the SFP transceiver module will result in an inrush current of no more than 30 mil greater than the steady state value. VCCR and VCCT may be internally connected within the SFP transceiver module.

8. To-l": These are the differential transmitter inputs. They are AC-coupled, differential lines with 100Q differentialtermination inside the module. The AC coupling is done inside the module and is thus not required on the host board. The inputs will accept differential swings of 500 - 2400 mV (250 - 1200 mV single-ended), though it is recommended that values between 500 and 1200 mV differential (250 - 600 mV single-ended) be used for best EMI performance.

Recommended Host Board Supply Filtering Network

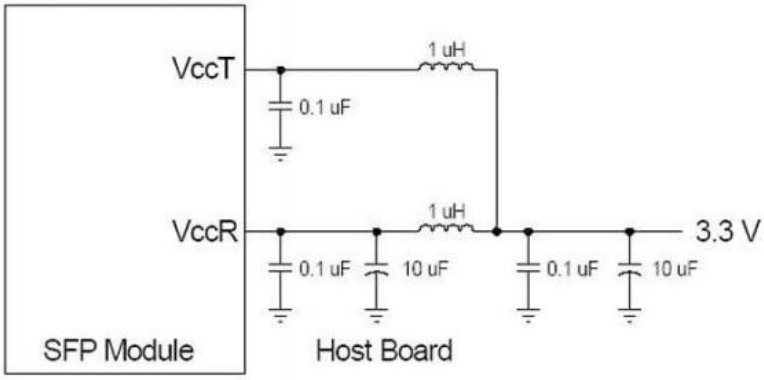

Figure 2 Recommended Host Board Supply Filtering Network

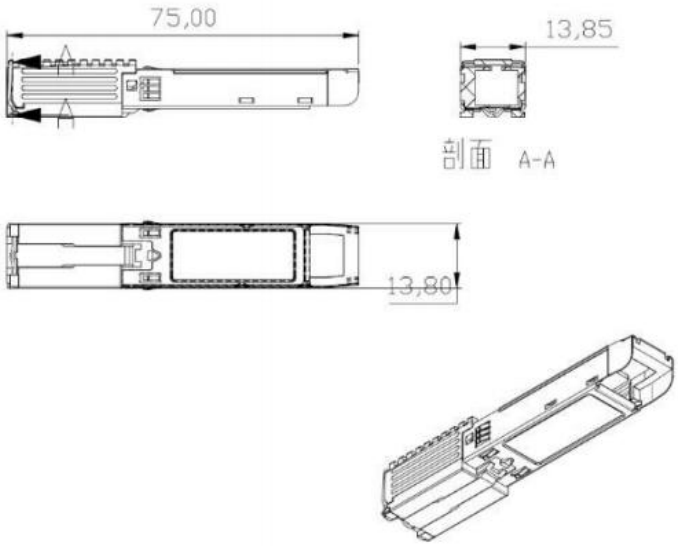

Figure 3 Mechanical Specifications

Ordering information

Table 9- Ordering information

Part Number	Product Description
EUP-0S11-20CM	Tx1.244/RX2.488 DFB,TX1310/RX1490nm,SC, SFP ONU Stick

AscentOptics reserves the right to make changes to the product(s) or information contained herein without notice. No liability is assumed as a result of their use or application. No rights under any patent accompany the sale of any such product(s) or information. Copyright © Ascent Optics All Rights Reserved.

E-mail: sales@ascentoptics.com

Web : http://www.ascentoptics.com